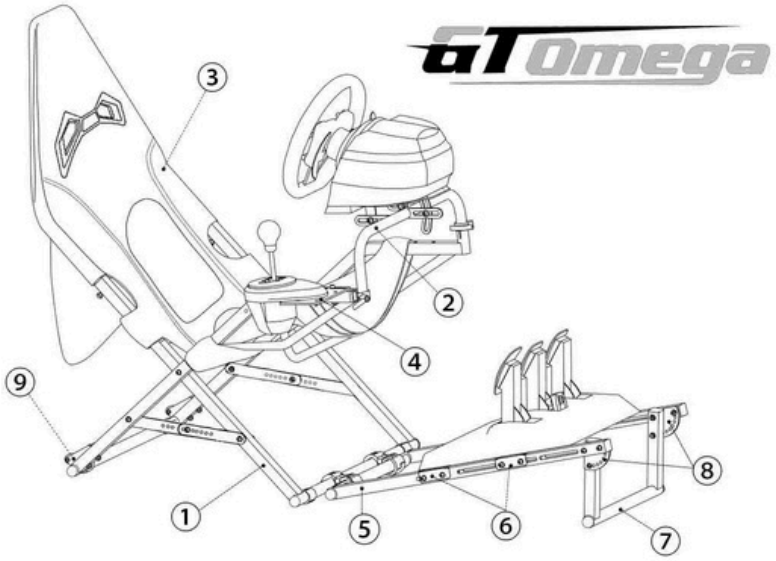
GTOmega
1
2
3
4
5
6
7
8
9

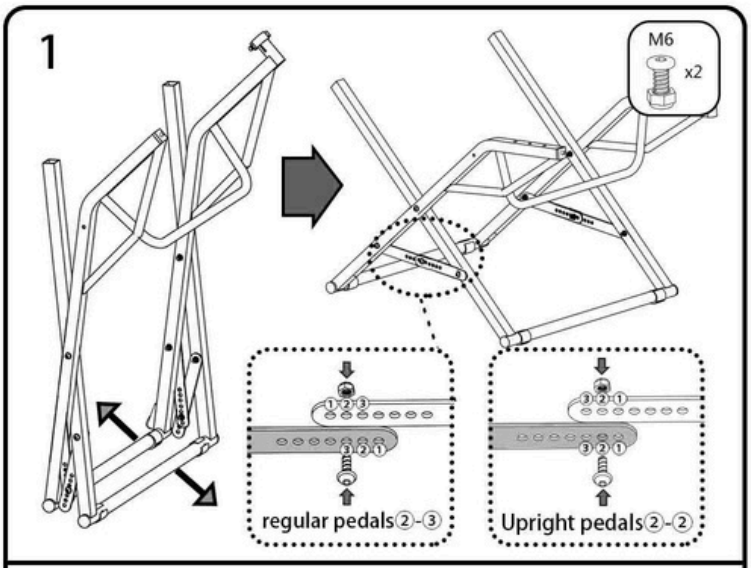
1
M6
x2
regular pedals ②-③
Upright pedals ②-②

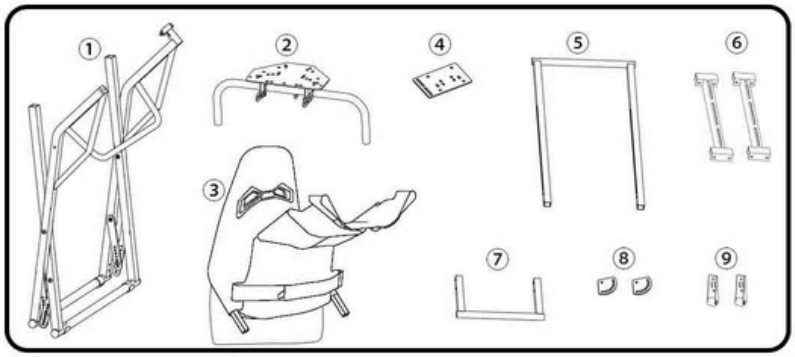
1
2
3
4
5
6
7
8
9

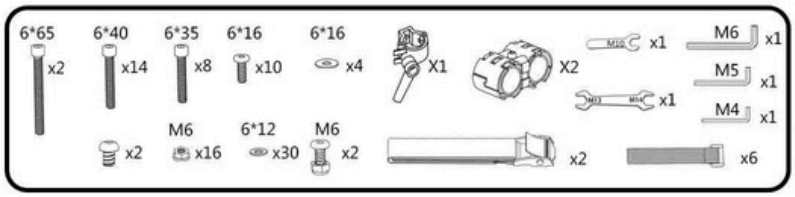
6*65 x2
6*40 x14
6*35 x8
6*16 x10
6*16 x4
X1
X2
M10 x1
M6 x1
M5 x1
M3 M4 x1
M4 x1
x2
M6 x16
6*12 x30
M6 x2
x2
x6

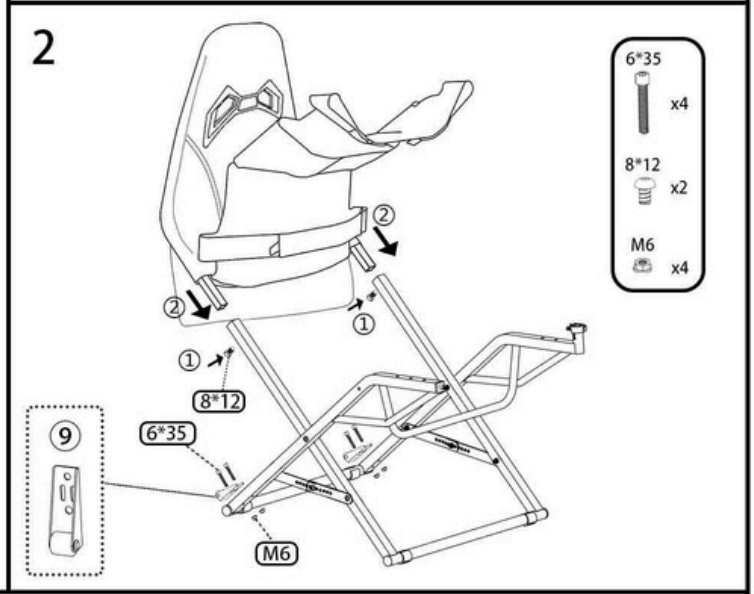
2
6*35 x4
8*12 x2
M6 x4
8*12
6*35
M6
9

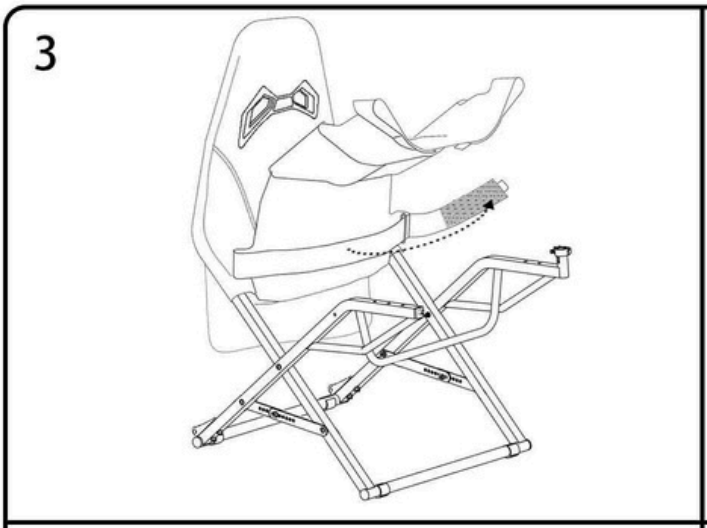
3

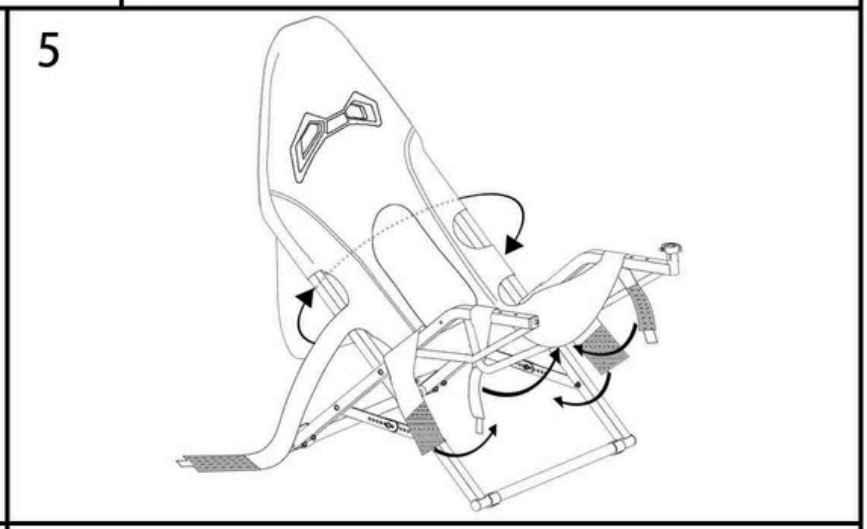
5

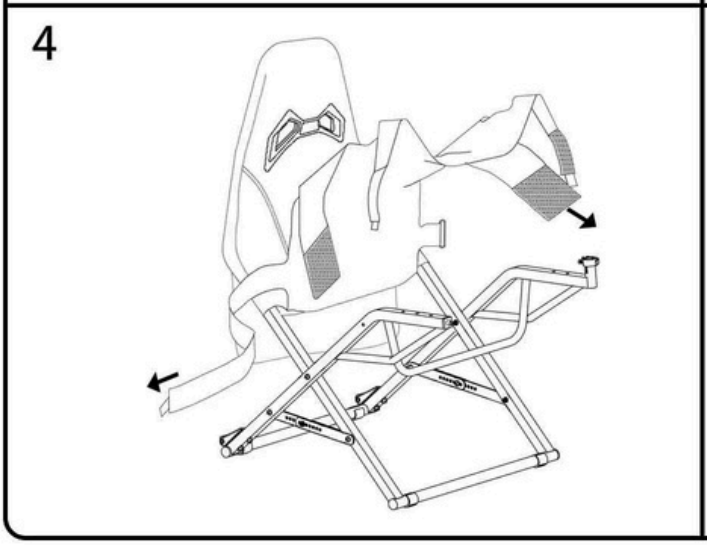
4

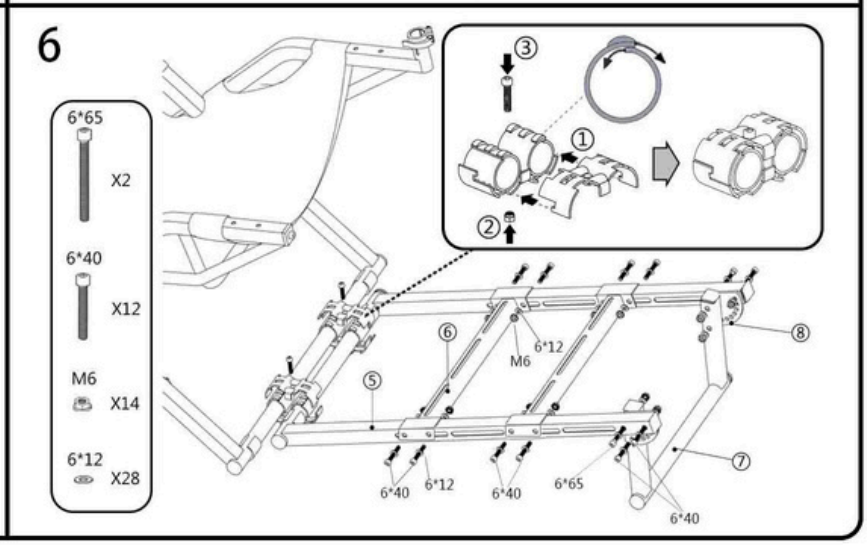
6
6*65 X2
6*40 X12
M6 X14
6*12 X28
6*12
M6
6*40
6*12
6*40
6*65
6*40

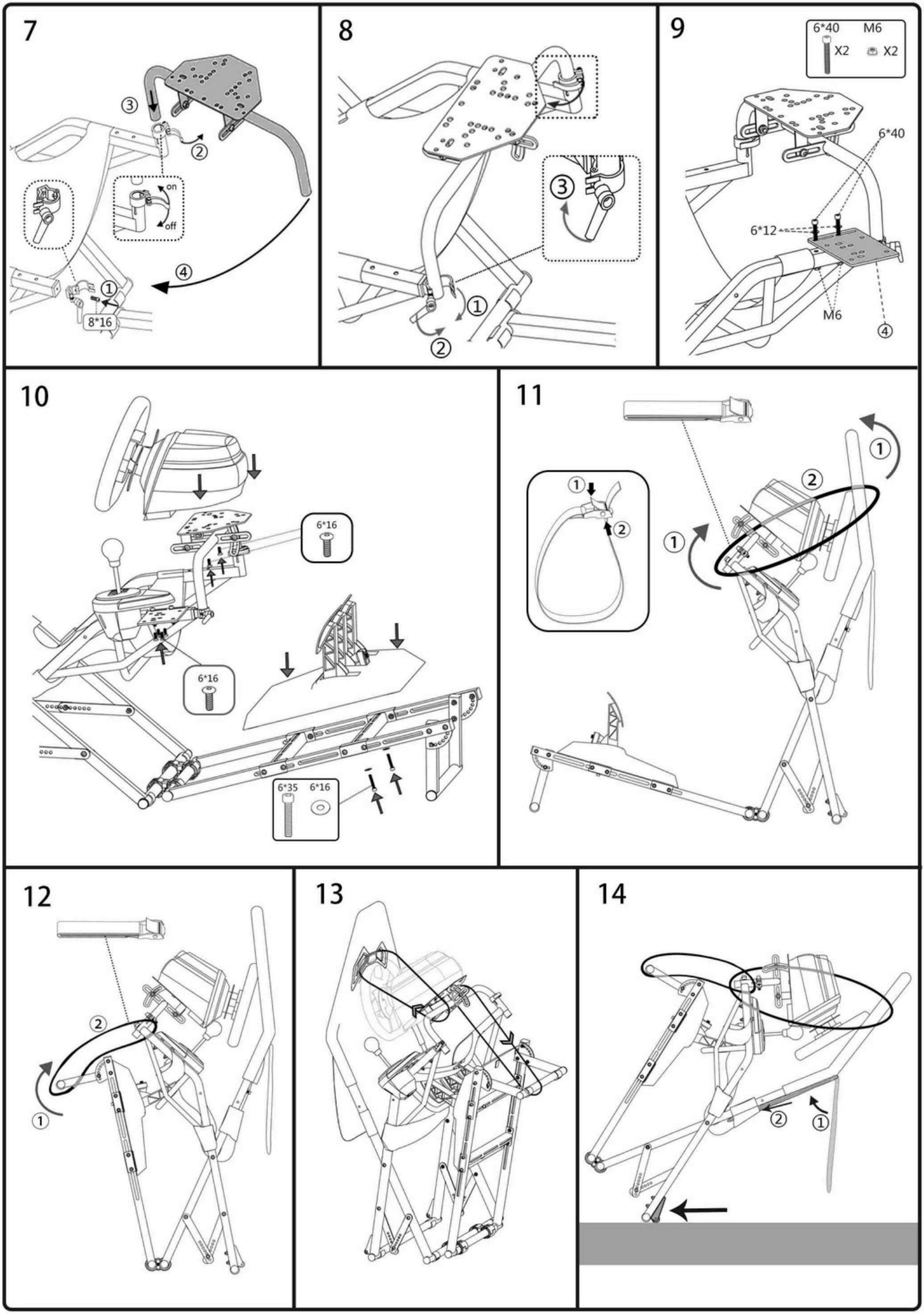
7
③
②
on
off
④
①
8*16
8
③
①
②
9
6*40
M6
X2
X2
6*40
6*12
M6
④
10
6*16
6*16
6*35
6*16
11
①
②
①
①
②
12
②
①
13
14
②
①